REVISION B

5/20/2005 | ECN-46673

EEDP-XXX-XXXX-RA1-DV2-X

ALL DIMENSIONS REF
DO NOT SCALE
FROM THIS PRINT

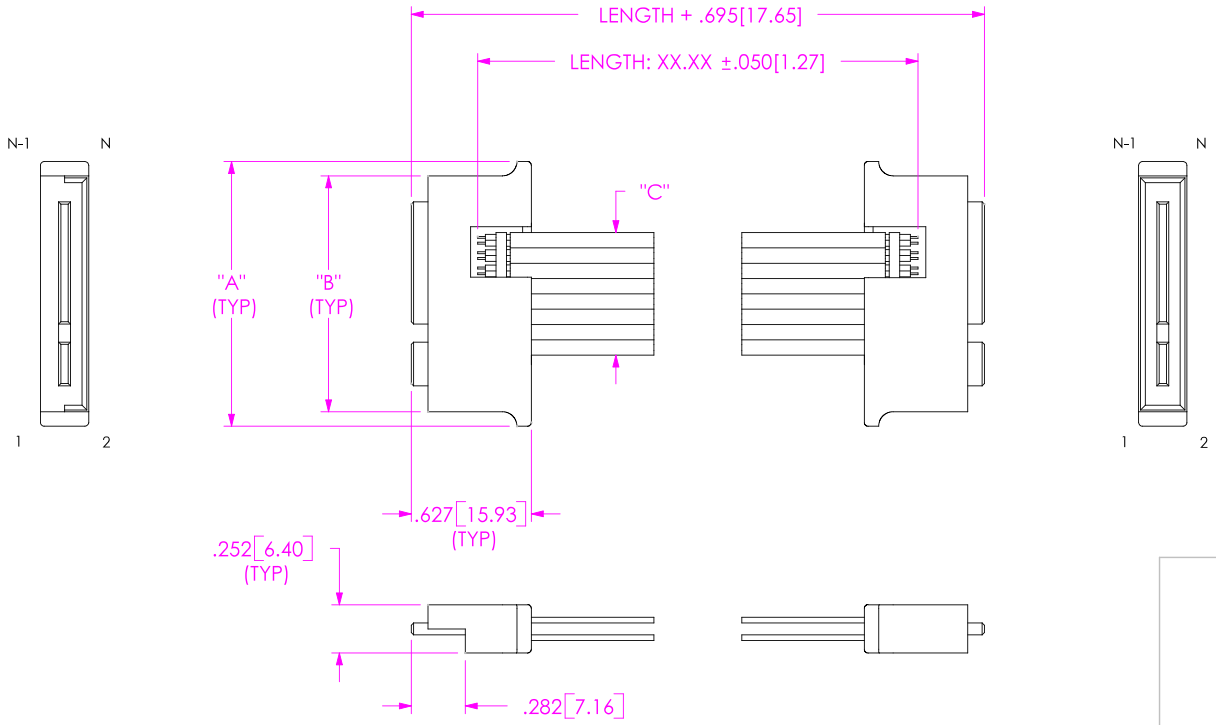

FIRST END

SECOND END

WIRING OPTION 1

POSITION 1 TO POSITION 1

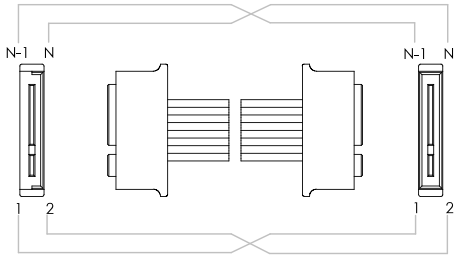

WIRING OPTION 2

POSITION 1 TO POSITION 2

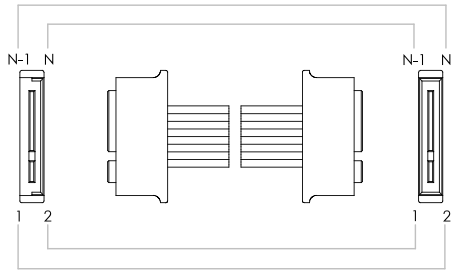

FOR -DS1, -DS2, -RS1, & -RS2 OPTIONS ONLY

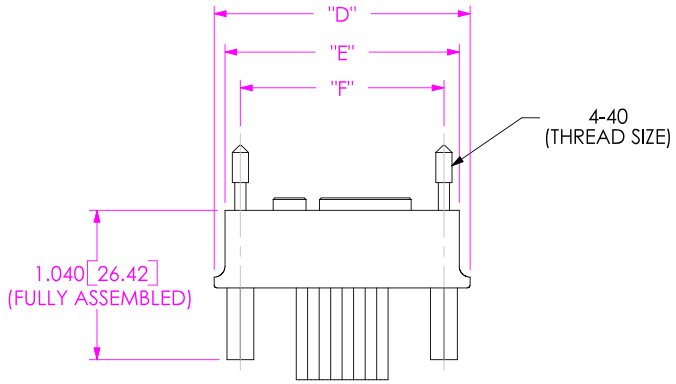

TABLE 1

No. OF PAIRS	"A"	"B"	"C"	"D"	"E"	"F"
-008	0.965 [24.51]	0.815 [20.70]	0.320 [8.13]	1.365 [34.67]	1.215 [30.86]	1.024 [26.00]
-016	1.382 [35.10]	1.232 [31.29]	0.640 [16.26]	1.782 [45.26]	1.632 [41.45]	1.417 [36.00]
-024	1.760 [44.70]	1.610 [40.89]	1.040 [26.42]	2.160 [54.86]	2.010 [51.05]	1.772 [45.00]
-032	2.099 [53.31]	1.949 [49.50]	1.280 [32.51]	2.499 [63.47]	2.349 [59.66]	2.126 [54.00]

PROPRIETARY NOTE

THIS DOCUMENT CONTAINS INFORMATION CONFIDENTIAL AND PROPRIETARY TO SAMTEC, INC. AND SHALL NOT BE REPRODUCED OR TRANSFERRED TO OTHER DOCUMENTS OR DISCLOSED TO OTHERS OR USED FOR ANY PURPOSE OTHER THAN THAT WHICH IT WAS OBTAINED WITHOUT THE EXPRESSED WRITTEN CONSENT OF SAMTEC, INC.

SAMTEC

520 PARK EAST BLVD, NEW ALBANY, IN 47150
PHONE: 812.944.6733 FAX: 812.948.5047
e-Mail: INFO@SAMTEC.COM CODE: 55322

SHEET SCALE: 1:1

DESCRIPTION:
TWIN AX EDGE CARD CABLE ASSEMBLY

DWG. NO.
EEDP-XXX-XXXX-RA1-DV2-X

BY: BRATCHER 6/16/2004 | SHEET 1 OF 1

F:\DWG\MISC\mktg\EEDP\EEDP-RA1-DV2.slddrw