REVISION F

5/4/2012 ECN-177220

ALL DIMENSIONS REF
DO NOT SCALE FROM THIS PRINT

XQXX-XXX-XXXX-SED-TBL-X-X

TABLE 2			
SERIES	"D"	"K"	"L"
EQCD	0.501 [12.73]	0.619 [15.72]	0.775 [19.69]
SQCD	0.625 [15.88]	0.619 [15.72]	0.775 [19.69]
HQCD	0.751 [19.08]	0.619 [15.72]	0.775 [19.69]
EQDP	0.525 [13.34]	0.619 [15.72]	0.775 [19.69]
HQDP	0.800 [20.32]	0.719 [18.26]	0.875 [22.23]
EQSD	0.760 [19.30]	0.619 [15.72]	0.775 [19.69]

F

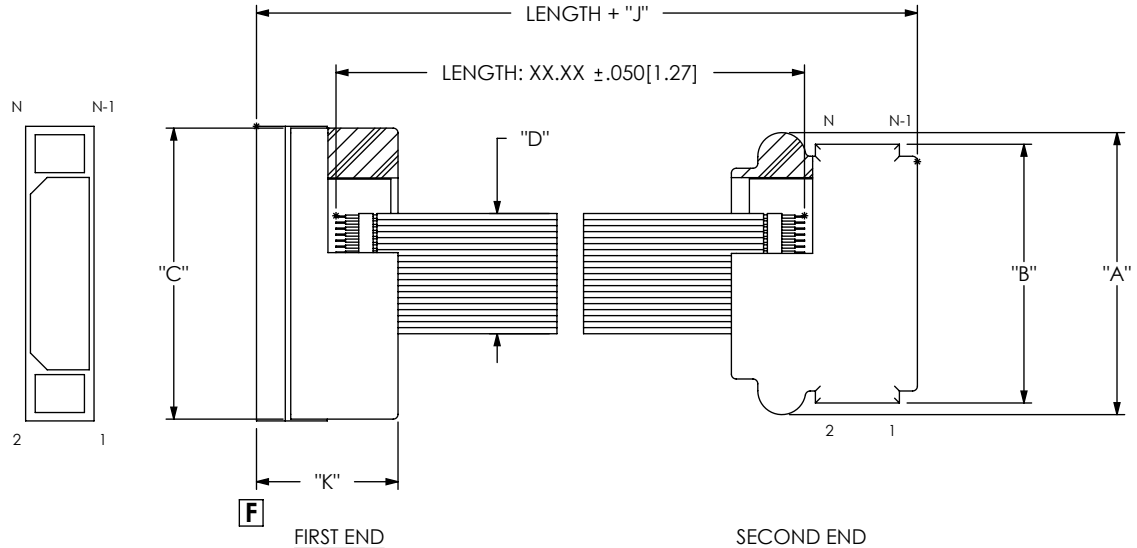

FIRST END

SECOND END

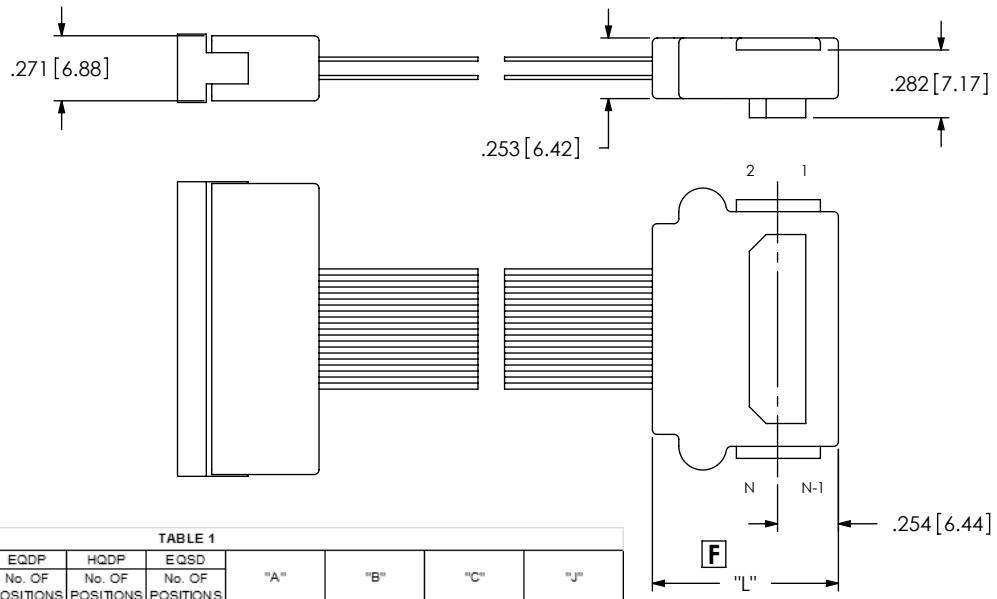

WIRING OPTION 1

POSITION 1 TO POSITION 1

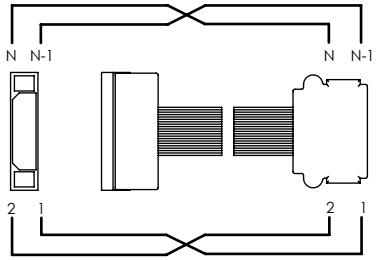

WIRING OPTION 2

POSITION 1 TO POSITION 2

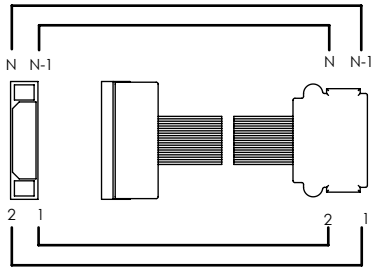

ONLY APPLICABLE FOR SCREW-DOWN END OPTIONS

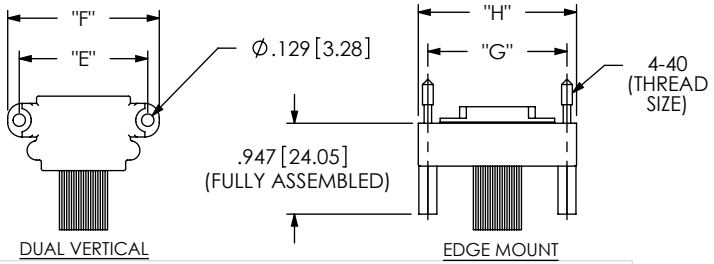

TABLE 3													
EQCD No. OF POSITIONS	SQCD No. OF POSITIONS	HQCD No. OF POSITIONS	EQDP No. OF POSITIONS	HQDP No. OF POSITIONS	EQSD No. OF POSITIONS	"E"		"F"		"G"		"H"	
N/A	N/A	N/A	N/A	N/A	-020	1.439	[36.55]	1.669	[42.39]	1.449	[36.80]	1.649	[41.88]
N/A	N/A	N/A	N/A	N/A	-040	2.227	[56.55]	2.456	[62.39]	2.237	[56.81]	2.436	[61.87]
-020	-025	-030	-014	N/A	N/A	1.339	[34.00]	1.579	[40.10]	1.449	[36.80]	1.649	[41.88]
-040	-050	-060	-028	N/A	N/A	2.126	[54.00]	2.366	[60.10]	2.237	[56.81]	2.436	[61.87]
-060	-075	-090	-042	N/A	N/A	2.913	[74.00]	3.154	[80.10]	3.024	[76.80]	3.224	[81.89]
-080	-100	-120	-056	N/A	N/A	3.701	[94.00]	3.941	[100.10]	3.812	[96.81]	4.011	[101.88]
N/A	N/A	N/A	N/A	-020	N/A	1.489	[37.82]	1.719	[43.66]	1.751	[44.48]	1.951	[49.56]
N/A	N/A	N/A	N/A	-040	N/A	2.414	[61.32]	2.644	[67.16]	2.539	[64.49]	2.739	[69.57]
N/A	N/A	N/A	N/A	-060	N/A	3.339	[84.81]	3.569	[90.65]	3.326	[84.48]	3.526	[89.56]
N/A	N/A	N/A	N/A	-080	N/A	4.264	[108.31]	4.494	[114.15]	4.114	[104.50]	4.314	[109.58]

TABLE 1													
EQCD No. OF POSITIONS	SQCD No. OF POSITIONS	HQCD No. OF POSITIONS	EQDP No. OF POSITIONS	HQDP No. OF POSITIONS	EQSD No. OF POSITIONS	"A"		"B"		"C"		"J"	
N/A	N/A	N/A	N/A	N/A	-020	1.275	[32.39]	1.178	[29.92]	1.213	[30.80]	0.806	[20.47]
N/A	N/A	N/A	N/A	N/A	-040	2.063	[52.39]	1.965	[49.92]	2.000	[50.80]	0.806	[20.47]
-020	-025	-030	-014	N/A	N/A	1.175	[29.85]	1.078	[27.38]	1.213	[30.80]	0.806	[20.47]
-040	-050	-060	-028	N/A	N/A	1.963	[49.85]	1.866	[47.40]	2.000	[50.80]	0.806	[20.47]
-060	-075	-090	-042	N/A	N/A	2.750	[69.85]	2.653	[67.39]	2.788	[70.80]	0.806	[20.47]
-080	-100	-120	-056	N/A	N/A	3.538	[89.85]	3.441	[87.39]	3.575	[90.80]	0.806	[20.47]
N/A	N/A	N/A	N/A	-020	N/A	1.325	[33.66]	1.128	[28.65]	1.515	[38.48]	1.036	[26.31]
N/A	N/A	N/A	N/A	-040	N/A	2.250	[57.15]	2.053	[52.13]	2.303	[58.50]	1.036	[26.31]
N/A	N/A	N/A	N/A	-060	N/A	3.175	[80.65]	2.978	[75.64]	3.090	[78.49]	1.036	[26.31]
N/A	N/A	N/A	N/A	-080	N/A	4.100	[104.14]	3.903	[99.12]	3.878	[98.50]	1.036	[26.31]

F:\DWG\MISC\mktg\XQXX\XQXX-SED-TBL.slddrw

PROPRIETARY NOTE

THIS DOCUMENT CONTAINS INFORMATION CONFIDENTIAL AND PROPRIETARY TO SAMTEC, INC. AND SHALL NOT BE REPRODUCED OR TRANSFERRED TO OTHER DOCUMENTS OR DISCLOSED TO OTHERS OR USED FOR ANY PURPOSE OTHER THAN THAT WHICH IT WAS OBTAINED WITHOUT THE EXPRESSED WRITTEN CONSENT OF SAMTEC, INC.

samtec

520 PARK EAST BLVD, NEW ALBANY, IN 47150
PHONE: 812-944-6733 FAX: 812-948-5047
e-Mail: info@SAMTEC.com code: 55322

SHEET SCALE: 1.25:1

DESCRIPTION: QSX / QTX CABLE ASSEMBLY

DWG. NO. XQXX-XXX-XXXX-SED-TBL-X-X

BY: BRATCHER 6/20/2003

SHEET 1 OF 1