REVISION C

5/15/2012 | ECN-177850

XQXX-XXX-XXXX-SPD-SBL-X-X

ALL DIMENSIONS REF

DO NOT SCALE FROM THIS PRINT

ECN APPROVAL FOR CURRENT REV IS PENDING

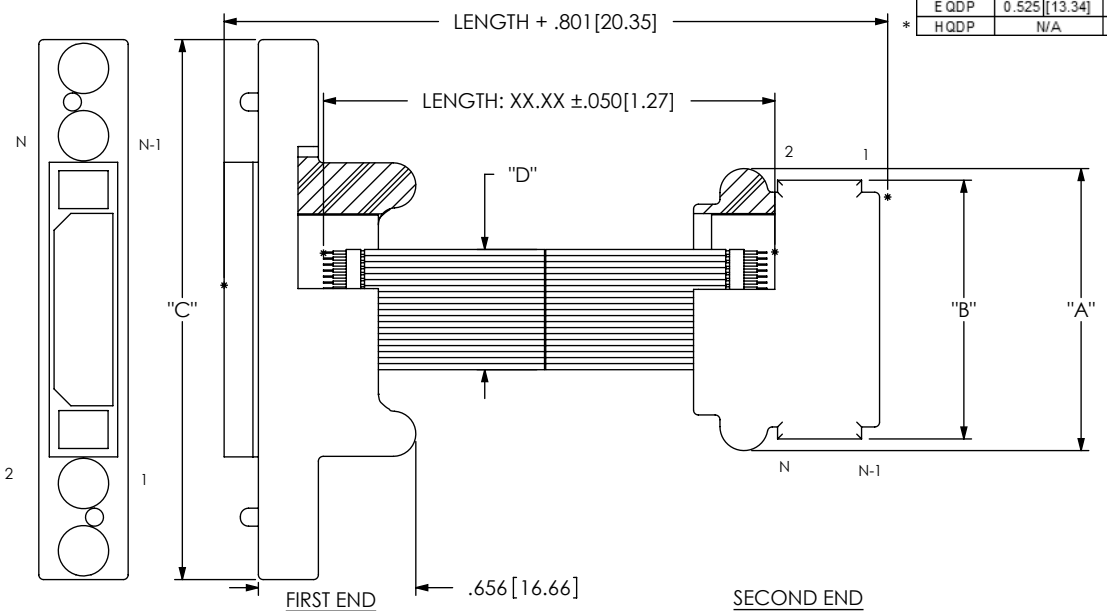

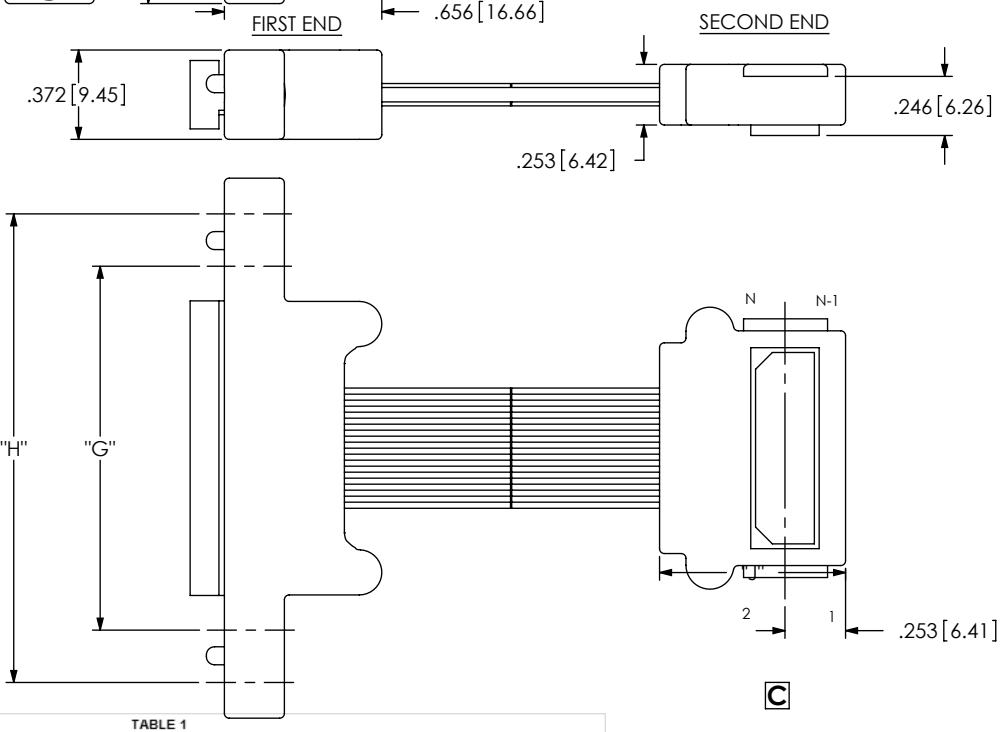

C

* = NOT TOOLED

TABLE 1

EQCD No. OF POSITIONS	SQCD * No. OF POSITIONS	HQCD * No. OF POSITIONS	EQDP * No. OF POSITIONS	HQDP * No. OF POSITIONS	"A"	"B"	"C"	"G"	"H"
-020	-025	-030	-014	N/A	1.175[29.85]	1.078[27.38]	2.25[57.15]	1.449[36.80]	2.010[51.05]
-040	-050	-060	-028	N/A	1.963[49.85]	1.866[47.40]	3.038[77.17]	2.237[56.80]	2.798[71.07]
-060	-075	-090	-042	N/A	2.750[69.85]	2.653[67.39]	3.826[97.18]	3.024[76.80]	3.585[91.06]
-080	-100	-120	-056	N/A	3.538[89.85]	3.441[87.39]	N/A	N/A	N/A

TABLE 2

SERIES	"D"	"J"
EQCD	0.501 [12.73]	0.775 [19.69]
SQCD	0.625 [15.88]	0.775 [19.69]
HQCD	0.751 [19.08]	0.775 [19.69]
EQDP	0.525 [13.34]	0.775 [19.69]
HQDP	N/A	0.875 [22.23]

C

WIRING OPTION 3

POSITION 1 TO POSITION N-1

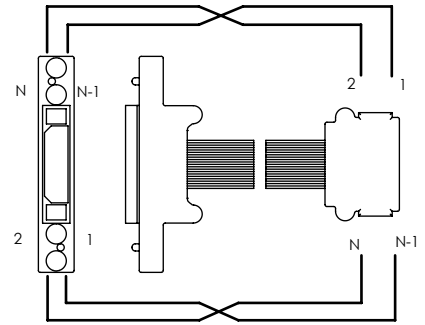

WIRING OPTION 4

POSITION 1 TO POSITION N

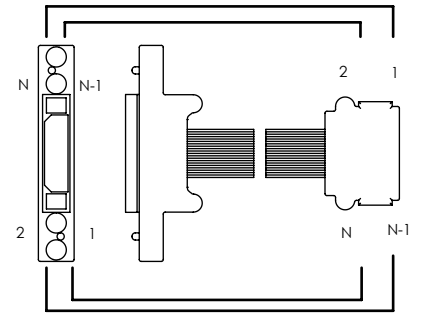

ONLY APPLICABLE FOR SCREW-DOWN END OPTIONS (SECOND END ONLY)

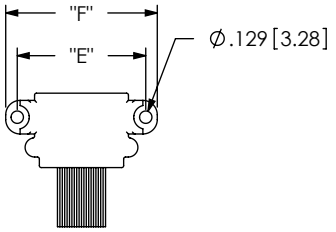

DUAL VERTICAL

TABLE 3

EQCD No. OF POSITIONS	SQCD No. OF POSITIONS	HQCD No. OF POSITIONS	EQDP No. OF POSITIONS	HQDP No. OF POSITIONS	"E"	"F"
-020	-025	-030	-014	N/A	1.339[34.00]	1.579[40.10]
-040	-050	-060	-028	N/A	2.126[54.00]	2.366[60.10]
-060	-075	-090	-042	N/A	2.913[74.00]	3.154[80.10]
-080	-100	-120	-056	N/A	3.701[94.00]	3.941[100.10]

PROPRIETARY NOTE

THIS DOCUMENT CONTAINS INFORMATION CONFIDENTIAL AND PROPRIETARY TO SAMTEC, INC. AND SHALL NOT BE REPRODUCED OR TRANSFERRED TO OTHER DOCUMENTS OR DISCLOSED TO OTHERS OR USED FOR ANY PURPOSE OTHER THAN THAT WHICH IT WAS OBTAINED WITHOUT THE EXPRESSED WRITTEN CONSENT OF SAMTEC, INC.

samtec

520 PARK EAST BLVD, NEW ALBANY, IN 47150
PHONE: 812-944-6733 FAX: 812-948-5047
e-Mail: info@SAMTEC.com code: 55322

SHEET SCALE: 1.25:1

DESCRIPTION: QSX / QSX CABLE ASSEMBLY

DWG. NO. XQXX-XXX-XXXX-SPD-SBL-X-X

BY: D FRALEY 05/23/2006 SHEET 1 OF 1

F:\DWG\MISC\mktg\XQXX\XQXX-SPD-SBL.SLDDRW