RF Characterization Report

185-J-P-EG-ST-AL-01-X

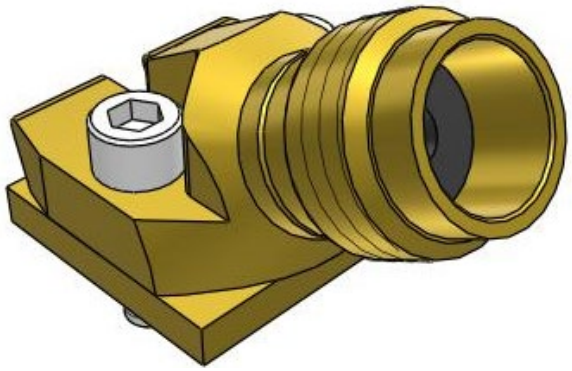

Test Date: Oct 2026

Description:
50 Ohm 1.85 mm Jack,
30 Degree Angled Launch, Compression Mount

Samtec Inc.
520 Park East Blvd.
New Albany IN 47151-1147 USA
©Samtec, Inc. 2005

WWW.SAMTEC.COM
1-800-SAMTEC-9 (US & Canada)
RF@samtec.com

Phone: 812-944-6733
Fax: 812-948-5047
Report Revision: 11/16/2026
All Rights Reserved

Series: 1.85 mm
Description: 50 Ohm 1.85 mm Jack, 30 Degree Angled Launch, Compression Mount

Table of Contents

Test Setup Information 1
Scope: 1
Instrument Setup & Test Accessories: 1
Calibration Type: 1
Adapter Use: 1
Test System Description 1
PCB-114076-SIG-XX Test Fixtures 2
PCB-114076-SIG-XX PCB Layout 2
185-J-P-EG-ST-AL-01-X Test Definition 3
Connector Under Test: 3
Results: 185-J-P-EG-ST-AL-01-X 4
VSWR 4
Return Loss 5
Insertion Loss 5

©Samtec, Inc. 2005
All Rights Reserved

Series: 1.85 mm
Description: 50 Ohm 1.85 mm Jack, 30 Degree Angled Launch, Compression Mount

Test Setup Information

Scope:

Provide standing wave ratio, return loss and insertion loss performance parameters for 1.85 mm 30 Degree Angled Launch Compression Mount connector.

Instrument Setup & Test Accessories:

Network Analyzer	Keysight PNA N5227B
Averaging Factor	1
Smoothing	Off
IF Bandwidth	1 KHz
Sweep Start	10 MHz
Sweep End	67 GHz
Points	6700
Test Cables	Gore 0F0CACB036.0-LF(DC to 67 GHz)

Calibration Type:

A Keysight mechanical calibration is performed using the Keysight 85058B Standard Mechanical Calibration Kit.

Calibration Kit	Keysight 85058B Standard Mechanical Calibration Kit

Adapter Use:

PCB-114076-SIG-XX RF board was used for the measurements of 185-J-P-EG-ST-AL-01-X.

Test System Description

The test fixture is composed of a six-layer TACHYON 100G material with 50Ω signal trace. Optimization of the RF launch was performed using full wave simulation tools to minimize reflections. This launch design was implemented on PCB-114076-SIG-XX.

Series: 1.85 mm
Description: 50 Ohm 1.85 mm Jack, 30 Degree Angled Launch, Compression Mount

PCB-114076-SIG-XX Test Fixtures

Shown below is a photograph of the test board.

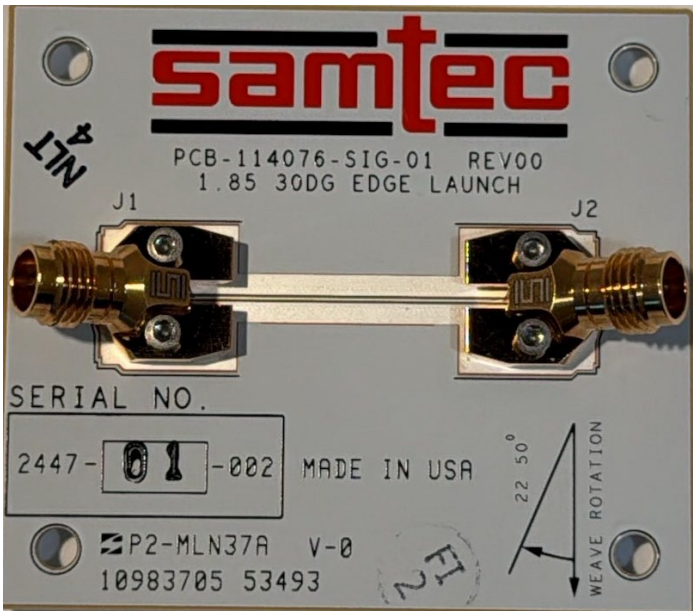

PCB-114076-SIG-XX PCB Layout

Artwork of the PCB design is shown below.

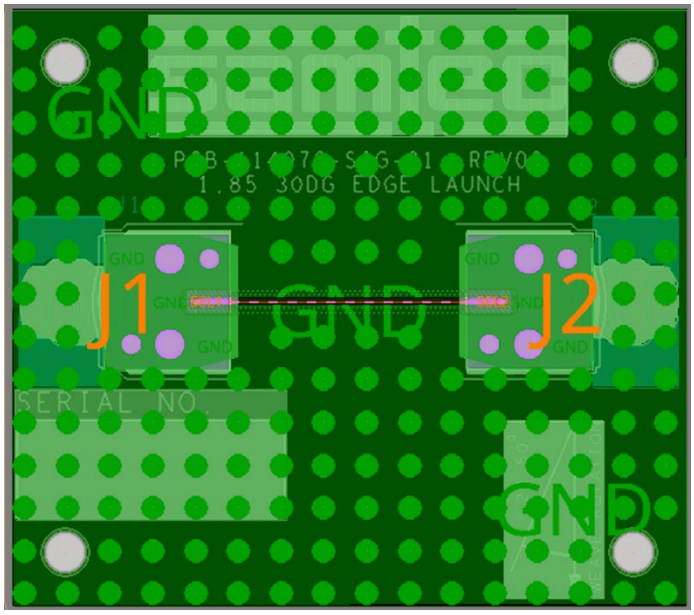

Series: 1.85 mm
Description: 50 Ohm 1.85 mm Jack, 30 Degree Angled Launch, Compression Mount

185-J-P-EG-ST-AL-01-X Test Definition

Part Number	End 1
185-J-P-EG-ST-AL-01-X	1.85 mm

Connector Under Test:

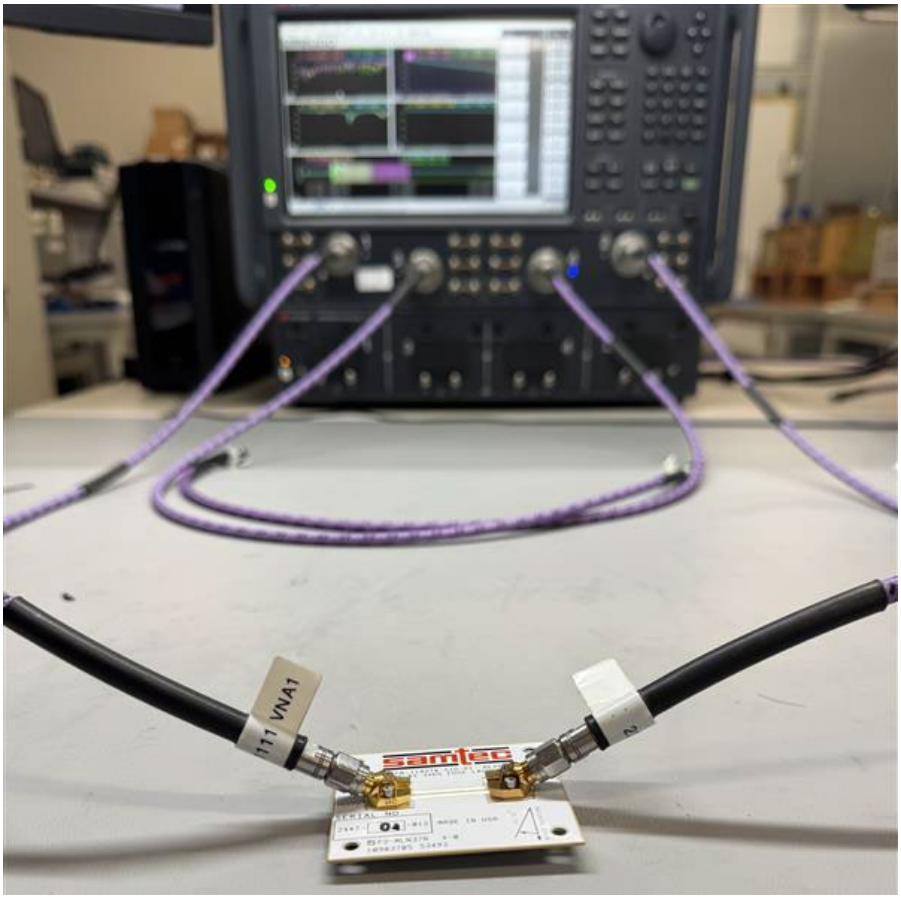

Series: 1.85 mm
Description: 50 Ohm 1.85 mm Jack, 30 Degree Angled Launch, Compression Mount

Results: 185-J-P-EG-ST-AL-01-X

The raw data was bifurcated using AFR in Keysight PLTS. The following results include one 185-J-P-EG-ST-AL-01-X connector, launch and 500 mils of PCB trace.

Description: 50 Ohm 1.85 mm Jack, Angled Launch			
Sample	**VSWR(max)**	**RL (dB, max)**	**IL(dB, min)**
Sample01_J1	1.95@67.00GHz	-9.86@67.00GHz	-2.43@67.00GHz
Sample02_J2	1.91@67.00GHz	-10.11@67.00GHz	-2.43@67.00GHz
Sample03_J2	2.17@67.00GHz	-8.63@67.00GHz	-2.84@67.00GHz
Sample04_J2	2.07@67.00GHz	-9.13@67.00GHz	-2.77@67.00GHz
Sample05_J2	1.89@67.00GHz	-10.24@67.00GHz	-2.39@67.00GHz
Sample06_J2	2.19@67.00GHz	-8.59@67.00GHz	-2.80@67.00GHz

VSWR

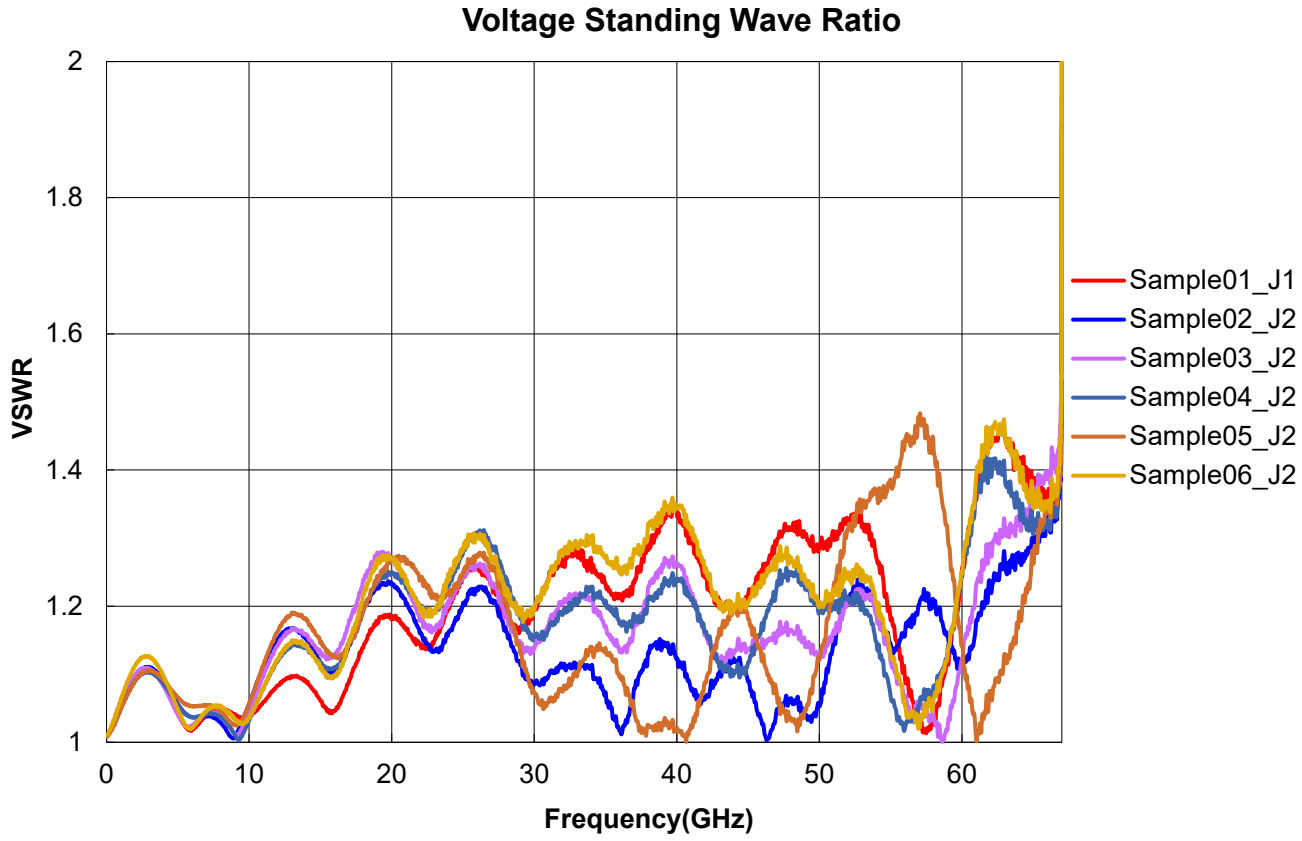

Series: 1.85 mm
Description: 50 Ohm 1.85 mm Jack, 30 Degree Angled Launch, Compression Mount

Return Loss

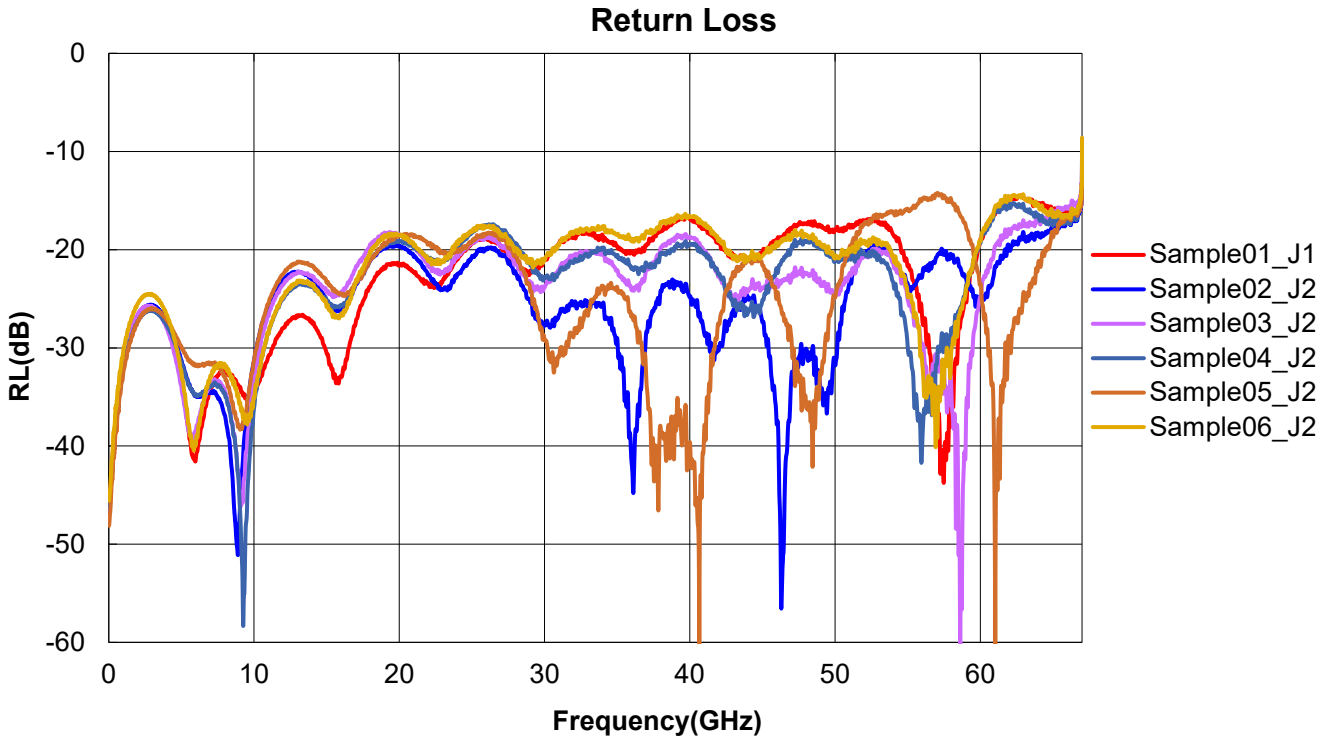

Insertion Loss

